These instructions are to be left with the User or adjacent to the Gas Meter

ECONOMAIRE 31/INTEJAN
WARM AIR HEATER
INSTALLATION, COMMISSIONING & SERVICING INSTRUCTIONS

G.C. Numbers:
Air Heater 42-416-16
Water Circulator 53-416-3b

Publication No. ZZ 1122/6
February 2008

ECONOMAIRE 31/INTEJAN has been tested and certified by Advantica for use with NATURAL gas G20.

Note: These instructions have been written to service both the ECONOMAIRE 31 and the ECONOMAIRE 31/INTEJAN. If your heater does not have the intejan circulator fitted, simply ignore the relevant section/s.

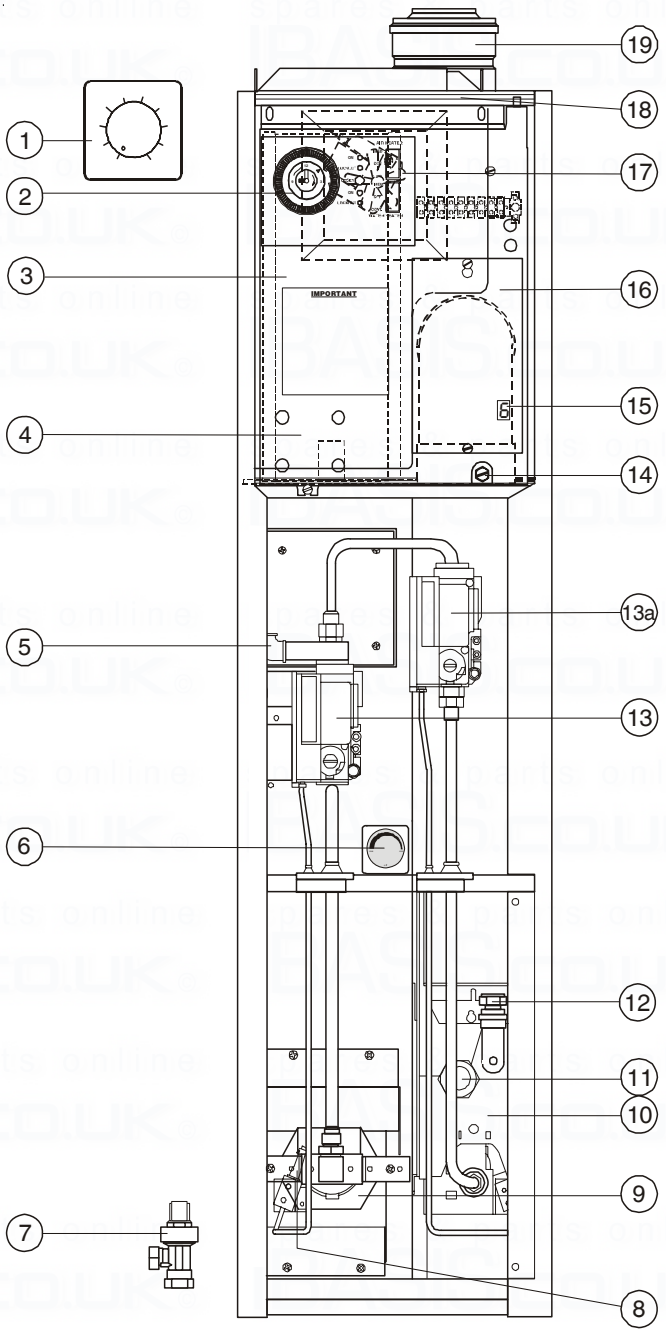

Fig. 1
Heater with Sealing Panel removed

1. Thermista-stat
2. Time control
3. Air circulator fan
4. Circuit diagram label
5. Gas connection
6. Circulator thermostat
7. Gas cock
8. Ignition burner
9. Main burner assembly
10. Intejan circulator
11. Water return connection
12. Water flow connection
13. Air heater multifunction control

13a. Intejan multifunction control (ECONOMAIRE 31 INTEJAN)

14. Flue gas test point
15. LED diagonstics indicator
16. Control module
17. Combustion air fan
18. Filter
19. Flue adapter

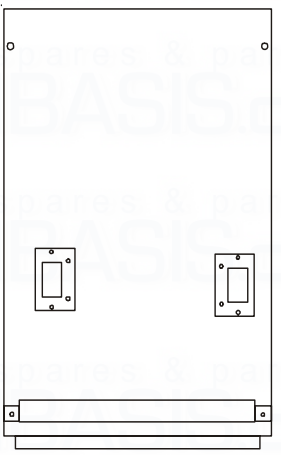

Fig.2
Sealing Panel

1. BRIEF DESCRIPTION

1.1 ECONOMAIRE 31/INTEJAN is a fan assisted downflow ducted warm air heater, which is fan flued and room sealed. The heater is supplied with digital temperature control (for maximum comfort) and a water circulator as standard. In addition, a rear rising duct kit is available for both models as well as an INTEJAN circulator kit for retro-fit to the ECONOMAIRE 31.

1.2 The air heater output can be adjusted between 7.3kW (26.4MJ/h, 25,000 Btu/h) and 8.8kW (31.7MJ/h, 30,000 Btu/h) "summer air circulation" of unheated air is available by manual selection (see the user's instructions). INTEJAN output is 3.5kW (12.6MJ/h; 11,900Btu/h).

Installation shall be in accordance with the current editions of:-

Building Standards (Scotland) (Consolidation) Regulations
Building Regulations
Gas Safety (Installation and Use) Regulations (as amended)
BS 7671 Institute of Electrical Engineers (I.E.E.) Wiring Regulations
BS 6891 Installation of Low Pressure Gas Pipework of up to 28mm (R1) in domestic premises (2nd family gases).
BS 5440 Pt. 1 (Flues for Gas Appliances)
BS 5440 Pt. 2 (Air Supply for Gas Appliances)
BS 5864 Installation of Gas Fired Ducted Air Heaters
British System Design Manual "Gas Fired Warm Air Heating"
Model and Local Authority Bye-laws
BS 5546 Installation of Domestic Hot Water Supplies.

IMPORTANT: IT IS A STATUTORY REQUIREMENT THAT ALL GAS APPLIANCES ARE INSTALLED BY COMPETENT PERSONS, (i.e. CORGI REGISTERED INSTALLERS) IN ACCORDANCE WITH THE GAS SAFETY (INSTALLATION AND USE) REGULATIONS (CURRENT EDITION). FAILURE TO COMPLY WITH THESE REGULATIONS MAY LEAD TO PROSECUTION.

1.3 **TECHNICAL DATA**

	ECONOMAIRE 31	ECONOMAIRE 31 INTEJAN
Weight:	54kg	61kg

	Air Heater	**Water Circulator**
Gas	G20	
Gas Supply Pressure	20mbar	
Gas Category	I 2H	
Countries of Installation	GB & IE	
Electrical Supply	230 ~ 50Hz fused 5A 250W	
Nox Class	1	
Max Water Side Operating pressure (PMS)	N/A	3bar
Open Vented System	N/A	Yes
Sealed System	N/A	Yes

	AIR HEATER						WATER CIRCULATOR		
	LOW RATE			HIGH RATE					
	KW	MJ/h	Btu/h	KW	MJ/h	Btu/h	KW	MJ/h	Btu/h
INPUT (gross)	10.0	36.0	34,100	11.6	41.8	39,600	4.86	17.5	16,600
OUTPUT	7.3	26.4	25,000	8.8	31.7	30,000	3.5	12.6	11,900
Gas rate cv 1037Btu/ft^3	0.93m^3/h (32.9ft^3/h)			1.10m^3/h (38.2ft^3/h)			0.458m^3/h (16.2ft^3/h)		
Burner setting pressure (hot)	9.7mbar (3.9 in wg)			12.6mbar (5.0 in wg)			15.0mbar (6.0 in wg)		
Main Injector	Polidoro AL 270						Amal 187/001/400		

2. HEATER COMPARTMENT AND CLEARANCES (See BS 5864)

2.1 **IMPORTANT:** If the heater is to be fitted to an existing base duct (warm air plenum), always ensure that installation is carried out such that the rear left hand corner of the heater is aligned with the rear left hand corner of the base duct, so that any overhang or blanking off will be at the front and/or right hand side. In any event, blanking plates must be mechanically secured and all joints sealed.

2.2 When the heater is fitted into a compartment, a minimum clearance from the compartment walls of 6mm (1/4 in) at the sides and rear and 75mm (3 in) at the front must be left. Consideration should also be given to the space required for the removal and replacement of the filter tray and the entry of the gas, water and electrical supplies. If gas and /or water connections are made from a side entry, a minimum clearance of 75mm (3 in) is required at that side.

2.3 For service access, a minimum of 450mm (18ins) is required at the front of the heater. Space must also be allowed, in a compartment installation, to permit the removal of the heater. The clearance between the appliance and the compartment should be not less than 75mm (3 in). However, if clearances are less than 75mm, the internal surface of the compartment must be lined with non-combustible material and the compartment must be of a fixed rigid structure.

2.4 In airing cupboard installations, the part used as the air heater compartment must comply with the relevant section of BS 5864 and must be completely separated by either a non-combustible partition or a perforated metal partition with the perforations not exceeding 13mm (1/2in). The secondary flue must be a tight fit where it passes through the partition and must be suitably protected (see BS 5440: Part 1).

2.5 In under-stairs installations, the compartment must comply with the relevant section of BS 5864, provided that in addition all internal surfaces (including the base) are non-combustible or lined with non-combustible material. This requirement is applicable only to dwellings of more than two storeys.

2.6 In free-standing installations, (see instructions packed with either: TC31M; TP31M; TS31M or TSG31M top closure kit), only one or two walls will be in close proximity to the air heater; these must be non-combustible.

2.7 Where the air heater is to be installed onto a combustible surface and under-floor ducting used, a suitable base tray (BT32) MUST be used in order to provide insulation. **NB where a base plenum is used no base tray is required!**

3. VENTILATION AIR

3.1 When installed in a compartment two permanent ventilation openings into the compartment are required, one at high level and one at low level. The minimum effective areas specified in Table 1 are related to the rated heat input of the air heater and assume that an INTEJAN circulator is fitted.

4. DUCT SYSTEM

(See British Design Manual - Gas fired Warm Air Heating)

4.1 **RETURN AIR**

4.1.1 Room-sealed appliances may be installed without return air ducting, provided that the path between the return air grille and the appliance return air inlet is protected in such a manner that the required air-flow will be maintained at all times. The return air grille MUST have a free area of not less than 860cm^2 (137in^2). It is recommended that the return air duct not be routed directly from the main living area, but from a convenient central area serving the remainder of the dwelling.

4.1.2 The return air system should be constructed of fire-resistant material. The flue shall not be run through an area serving as a return air plenum. It is extremely important that the correct size of return air grilles and ducting is used. For heaters on maximum output the return air duct size should not be less than the equivalent of 250mm x 200mm (10" x 8"). If flexible duct is used the duct diameter should not be less than 300mm (12") dia. The return air grille should have a free area of not less than 860cm^2 (137in^2).

4.1.3 An adequate and unobstructed return air path is essential from areas not served by a directly ducted return and to which warm air is delivered. All such rooms should be fitted with relief grilles which have a free area of 0.0088m^2/kW (1in^2/250Btu/h) of heat supplied to the room. The only exceptions are kitchens, bathrooms and WC.'s.

4.1.4 The return air duct should allow for ease of removal for access to the flue.

VENTILATED FROM INSIDE BUILDING	Low level grille 162cm^2 (25in^2)
	High level grille 162cm^2 (25in^2)
VENTILATED FROM OUTSIDE BUILDING	Low level grille 81cm^2 (13in^2)
	High level grille 81cm^2 (13in^2)

Table 1:
Minimum Effective Areas

4.1.5 All duct work in the room or internal space in which the heater is installed shall be mechanically secured and sealed with ducting tape.

4.2 **WARM DELIVERED AIR**

4.2.1 All duct work, including riser ducts, should be fully insulated with 50mm (2in) fibreglass or similar. If short extended duct runs are taken below floor level these should be similarly insulated and in addition wrapped with a sound vapour proof barrier. They must also be protected from crushing.

4.2.2 The duct system should be carefully designed (as given in the guidelines in the British System Design Manual) to suit the needs of specific heating requirements and building layout. The type of duct system (e.g. radial/extended plenum/ stepped) should be installed using the least number of fittings to minimise airflow resistance. The base duct, which equalises the air pressure to supply ducts, must be constructed to support the weight of the heater, which must be sealed using self-adhesive foam strip, ducting tape or sealing compound. All ducting and blanking plates must be mechanically secured and sealed.

5. INSTALLATION REQUIREMENTS

NOTE: THIS APPLIANCE MUST ONLY BE INSTALLED WITH THE SUPPLIED ACCESSORIES AND TERMINAL.

5.1 **FLUES** The ECONOMAIRE 31/INTEJAN can be used with horizontal or vertical flue types C12 and C32. You should also consult (or be familiar with) British Standards BS 5440 Pt. 1 Flues

5.1.1 All joints must be soundly sealed.

5.1.2 Sufficient support brackets must be used in order to support the total weight of the flue system.

5.1.3 The flue must conform with Building Regulations and British Gas Materials and Installations specification (3rd edition) regarding clearance and shielding from combustible materials.

5.1.4 The horizontal flue length MUST NOT be less than 300mm plus 90° bend and MUST NOT exceed 12m excluding terminal.

5.1.5 The total vertical flue length MUST NOT be less than 1m and MUST NOT exceed 12m excluding terminal.

5.1.6 Total length refers to the equivalent worked flue length and therefore includes bends and NOT the distance from the heater to the flue terminal.

5.1.7 When calculating total flue length, reference MUST be made to the following 'equivalent lengths':

A) 90° bend = 2m **B)** 45° bend = 1m

5.1.8 The maximum number of 90° bends that can be used is:

A) Horizontal = 4 **B)** Vertical = 4

5.1.9 If a 'short flue' is used, the factory fitted flue orifice MUST be left in place (see Fig.3).

5.1.10 'short flue' refers to a total flue length not exceeding:

A) Horizontal (plus 90° bend) = 0.8m **B)** Vertical (including terminal) = 5m

5.1.11 Where the total flue length exceeds these lengths, the flue orifice MUST be removed.

5.1.11 The heater is supplied with either a horizontal or vertical flue, dependant upon your specification when ordering. Reference should be made to Table 2 for extra flue/terminal components.

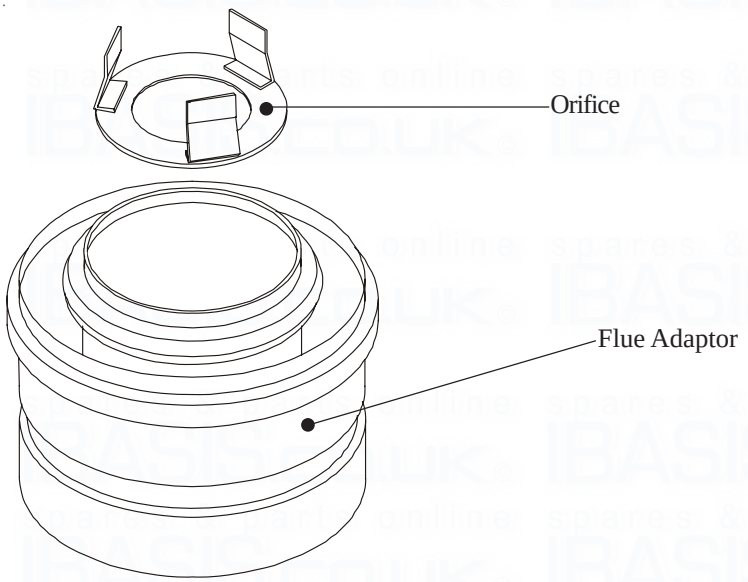

Fig. 3
Flue Adaptor and Orifice

5.2 **HORIZONTAL TERMINAL LOCATION:**

5.2.1 The terminal must be positioned on the outside of the building and allow for the free passage of air across it at ALL times.

5.2.2 Avoid positions where the terminal is adjacent to projections, particularly under a balcony or immediately adjacent to a drain pipe.

5.2.3 The terminal position must ensure that combustion products cannot enter the building in which the heater is installed (or any adjacent building) through windows, doors or by any other means.

5.2.4 Fig. 4 shows recommended terminal positions

5.2.5 It is recommended that the flue is fitted so that the outer part is flush with the wall. However, where this is not the case, the maximum protrusion of the outer part of the flue through the wall MUST NOT exeed 22mm (see Fig. 5)

5.2.5 If the heater is to be installed in a timber framed building you MUST consult British Gas publication "Guide for Gas Installations in Timber Framed Housing DM2" or your local gas region.

5.2.6 Where the lowest part of the flue terminal is located less than 2 metres above the ground, a balcony, or above a flat roof across which there is access, the terminal MUST be fitted with a Tower Flue Components type K3 guard (or similar) such that the distance between the guard and the nearest part of the terminal is no less than 50mm.

5.2.7 Reference should be made to Table 2 for required terminal components and guard.

5.2.8 **NOTE: TO ENSURE THAT RAINWATER CANNOT ENTER THE HEATER UNIT, THE FLUE MUST BE INSTALLED WITH A SLIGHT FALL AWAY FROM THE HEATER.**

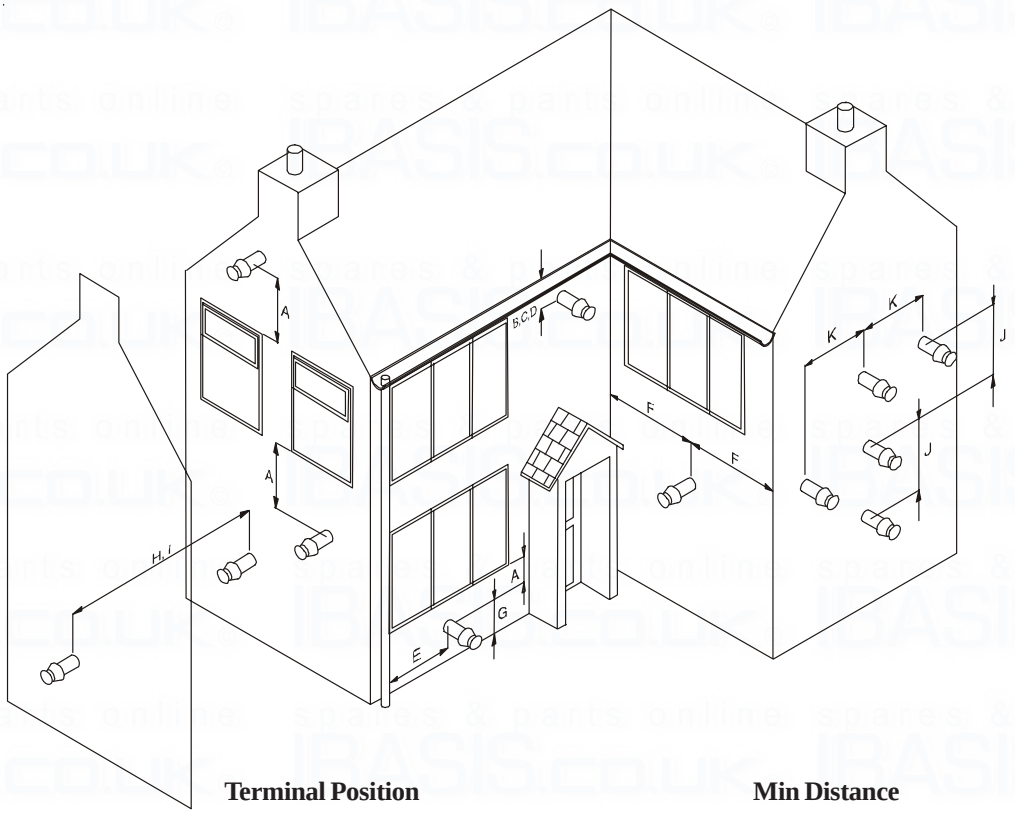

	Terminal Position	Min Distance
A	Directly below a window or other opening	300mm
B	Below gutters, soil pipes or drain pipes	75mm
C	Below eaves	200mm
D	Below balcony	200mm
E	From vertical drain/soil pipes	150mm
F	From internal or external corners	300mm
G	Above ground or balcony level	300mm
H	From a surface facing terminal	600mm
I	From a terminal facing a terminal	1200mm
J	Vertically from a terminal on the same wall	1500mm
K	Horizontally from a terminal on the same wall	300mm

Fig.4
Recommended (Horizontal) Terminal Positions

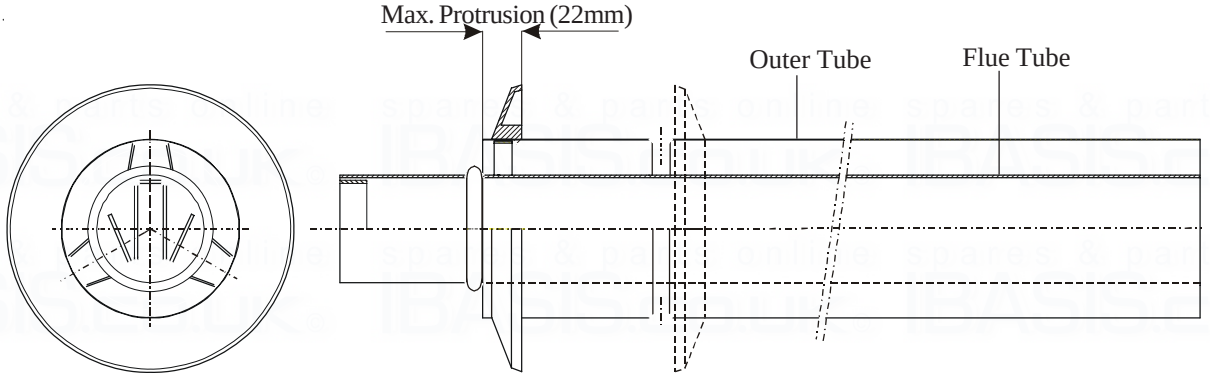

Fig. 5
Horizontal Flue Terminal (Showing Maximum Protrusion)

5.3 **VERTICAL TERMINAL LOCATION:**

5.3.1 The ECONOMAIRE 31/INTEJAN is designed to be used with a vertical flue where the installation of a horizontal flue is either not possible or not desired.

5.3.2 Installation of a vertical flue can be achieved on either a flat or pitched roof with a pitch angle of between 25° and 50°.

5.3.3 The terminal MUST be positioned on the outside of the building and allow for the free passage of air across it at ALL times.

5.3.4 Avoid positions where the terminal is adjacent to projections; particularly under a balcony.

5.3.5 The terminal position must ensure that combustion products cannot enter the building in which the heater is installed (or any adjacent building) through windows, doors or by any other means.

5.3.6 Fig. 6 shows recommended terminal positions.

5.3.7 Reference should be made to Table 2 for the required terminal components.

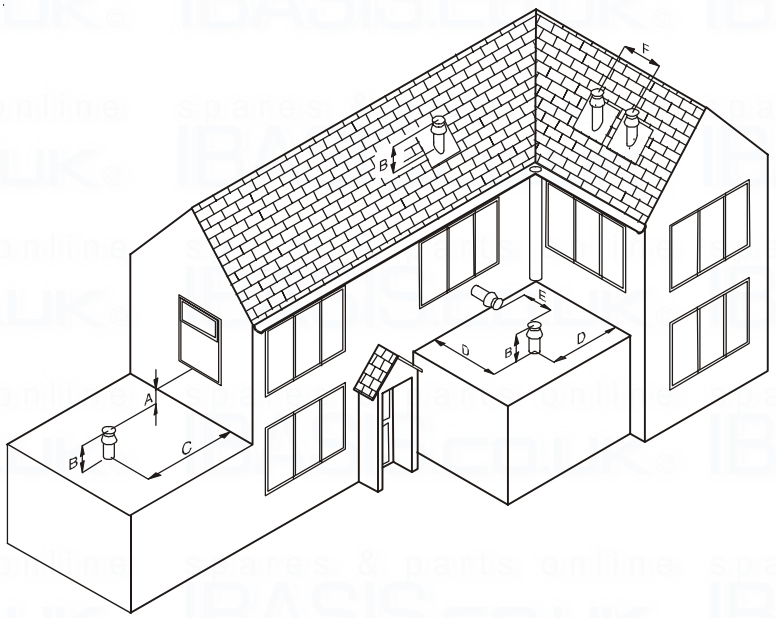

	Terminal Position	Min Distance
A	Directly below a window or other opening	300mm
B	Above roof level (to base of terminal)	300mm
C	From adjacent wall to flue	300mm
D	From internal corner to flue	400mm
E	From facing terminal	1200mm
F	Between terminals	300mm
G	Below eaves or balcony	NOT RECOMMENDED

Fig. 6
Recommended (Vertical) Terminal Positions

PART No	CONTENTS	COLOUR
1000-0014840	1 X 90° Standard Flue Elbow	White
1000-0014850	1 X 45° Flue Elbows	White
1000-0014870	1 X 500mm Extension	White
1000-0014860	1 X 1000mm Extension	White
1000-0014880	1 X Vertical Terminal 1 X Support Bracket	Anthracite
1000-0014980	1 X Vertical Terminal 1 X Support Bracket	Terracotta
1000-0014890	1 X Lead Pitched Roof Flashing 1 X Collar	Anthracite
1000-0014990	1 X Lead Pitched Roof Flashing 1 X Collar	Terracotta
1000-0014900	1 X Aluminium Flat Roof Flashing	Aluminium
1000-0014910	1 X Horizontal Wall Terminal	White
1000-0014920	2 X Wall Plates (for above)	N/A
1000-0014930	1 X Horizontal Wall Terminal 2 X Wall Plates	N/A
1000-0014940	1 X Condensation Drain	White
1000-0014950	1 X Syphon Kit (for above)	N/A
1000-0014960	1 X Condensation Drain 1 X Syphon Kit	N/A
1000-0014970	1 X Wall Bracket (100mm dia)	N/A
1000-0015430	1 X Terminal Guard	N/A

Table 2.
Flue and Terminal Components

5.4 **ELECTRICAL**

WARNING: THIS APPLIANCE MUST BE EARTHED!

5.4.1 **Mains.**

a. The heater is supplied with mains cable (PVC sheathed, heat resisting to 85°C), 3 core: Brown; Blue; Green/Yellow, 6A, 0.75mm^2), connected to a terminal block and exiting through the heater at the right hand top. The cable is suitable for a 230V 50Hz supply and requires connection to the fixed wiring using a double pole switched, fused spur with a contact separation of at least 3mm in ALL poles. The fuse fitted must be rated 5A to BS 1362. Connections must also be in accordance with the current edition of I.E.E Regulations BS 7671.

NOTE: If, for any reason, the heater is re-wired, then 3 core cable that meets the above specification MUST be used. Under NO circumstances, should 5 core cable be used for the combined purpose of supplying power to the heater and connecting the thermista-stat!

b. Fan delay and overheat (limit controls) are not adjustable and are factory set so that the limit switch opens at 80°C and closes at 40°C.

c. An electronic controller (thermista-stat) is supplied which acts like a room thermostat.

5.4.2 **Thermista-stat and its location.**

a. The thermista-stat should be located where there is free air circulation and positioned approx. 1.5m (5ft) from the floor.

b. Avoid the following locations:

i. In a room where temperature is greatly affected by the sun or any other heat source, e.g. radiant fire, wall light fittings or TV set.

ii. Near an outside door or windows, or on an outside wall.

iii. Where it will be affected by warm air ducts, diffusers, waste pipes or the heater itself.

iv. Where it will be subjected to vibration.

c. Connect the thermista-stat wires to terminals '8' and '9' on the terminal block (see Figs. 13 & 14).

5.5 **GAS** (See BS 5864 and BS 6891)

5.5.1 The local gas supply conditions MUST be adequate for the specified burner pressures as stated in the technical specification (para. 1.3)

5.5.2 An independent gas supply pipe from the meter is to be preferred wherever possible. Where this is not possible, the pipe must be capable of taking the complete input of the heater and all other gas appliances being served by the same pipe. This supply should be suitably sized to conform to British Standards requirements of no more than 1.0 mbar (0.4in wg) pressure drop (See table of discharge in BS 6891).

5.5.3 The 1/2in union gas cock (supplied) MUST be fitted to the gas inlet of the heater for easy isolation during servicing. The gas pipe should be fitted and installed so as to be durable, substantial and gas tight. To assist in determining where a gas connection may not be tight, a leak detection fluid should be applied around the connection. Under no circumstances should a flame be used to locate a gas leak. Gas entry to the air heater is through either side or the base, to a Rc1/2 (1/2in BSP. external [taper] thread).

6. AIR HEATER COMMISSIONING

6.1 **PREPARATION:**

After installation of the appliance, you MUST do the following:

6.1.1 Test for gas leakage using proprietary detection fluid and seal any leaks found.

6.1.2 Carry out preliminary electrical system checks.

6.1.3 Ensure that:

a. filter, fan and fan compartments are free from obstructions.

b. all registers or grilles are open and conform to design specifications.

c. return, relief and ventilation air installations are adequate.

6.2 **SYSTEM BALANCING:**

6.2.1 Set the air heater electrical supply **ON.**

6.2.2 Set the thermista-stat to the "SUMMER AIRFLOW" position.

6.2.3 Balance the system to provide the required volume proportions at the warm air outlets.
Note: If the system includes ceiling diffusers, the air through these should be NOT LESS THAN 1.5m/s (300ft/min), except for very small rooms, (i.e. bathrooms etc.). Outlet faces may require partial blanking in order to achieve this.

6.3 **LIGHTING IGNITION AND MAIN BURNER:**

6.3.1 Turn on the gas supply to the heater.

6.3.2 Set both the "AIR HEATER" and "WATER HEATER" switches on the time control unit to the "OFF" position.

6.2.3 Set the thermista-stat to "9".

6.3.4 Locate the status LED indicator which can be observed through the inspection hole in the bottom right hand corner of the control module.

6.3.5 Turn on the mains power supply to the heater

6.3.6 Set the "AIR HEATER" switch on the time control to "CONT." and observe the LED status indicator.

6.3.7 Whilst the control module runs through its diagnostic cycle the decimal point (DP) in the bottom right hand corner of the LED display will flash continuously.

6.3.8 The ignitor will spark for a maximum period of 60 seconds during which time the ignition and main burners SHOULD ignite and the igniter will stop.

6.3.9 When the control module reaches stage 5, (indicated by "5" on the LED) power is fed to the gas valve and the green LED "ON" light on the indicator panel will illuminate. After a period of approx. 5 seconds, the module will move on to stage 6 (indicated by "6" on the LED). **NOTE: regardless of when the burner ignites during the 60 second period, the LED will continue to display stage 6.**

6.3.10 If, after the 60 second period, the main burner has ignited the LED indicator will show "0" and the green LED "ON" light on the indicator panel will remain steady.

6.3.11 If the main burner fails to ignite, the red LED marked "LOCKOUT" will illuminate on the display panel and the LED status indicator will display an alphanumeric character relevant the the fault detected.

6.3.12 In the event of a lockout and the ignition and main burners failing to ignite, reference should be made to table 4 in the fault finding section of these instructions in order to establish the fault condition.

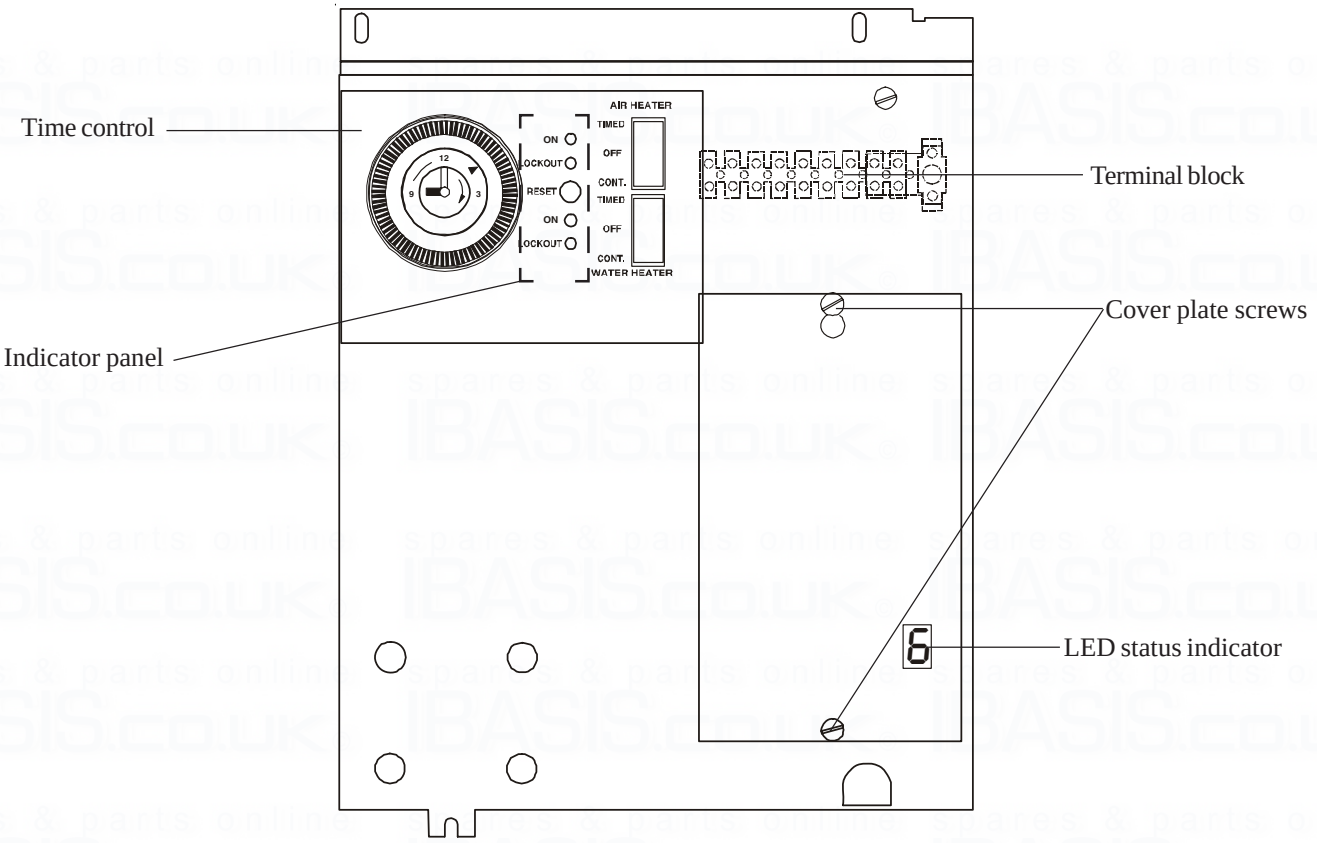

Fig. 7
Electrical Door Assembly
(showing time control, indicator panel and status indicator)

6.3.13 Allow the air heater to operate for a minimum of 15 minutes to ensure stability.

6.3.14 Reset the thermista-stat to the desired comfort level

6.3.15 Set the time control to the desired “on and “off” periods.

6.3.16 Set the “AIR HEATER” switch on the time control to “TIMED”.

6.4 **MAIN BURNER PRESSURE TEST:**

NOTE: AIR HEATER BURNERS ARE FACTORY SET TO PROVIDE A NOMINAL HIGH RATE OUTPUT AS DETAILED IN SUB PARA 1.2

6.4.1 Loosen the screw on the outlet pressure test point and fit a pressure test gauge (see Fig. 8)

6.4.2 Check the gauge reading against the information at paragraph 1.3.

6.4.3 If necessary, use the burner pressure adjuster to obtain required gauge reading in accordance with paragraph 1.3.

6.4.4 Remove the pressure gauge and re-tighten screw on the outlet pressure test point.

6.5 **AUTOMATIC CONTROLS CHECK**

6.5.1 Light the ignition and main burners as detailed in 6.3 above.

6.5.2 Allow the heater to operate for 15 minutes to ensure stability.

6.5.3 After a short period, ensure that the fan increases to full speed.

6.5.4 When the temperature reaches the control setting, check that the main burner cycles ON and OFF at intervals of approx. 75 to 120 seconds.

6.6 **SAFETY CHECK**:

In order to check the correct operation of the control module, run the heater for a short period and introduce a fault condition by carrying out the following sequence:

6.6.1 Check for gas soundness within the appliance.

6.6.3 Turn on both the gas and electrical supplies to the heater.

6.6.4 Set the “AIR HEATER” switch on the time control unit to “CONT”.

6.6.5 Light the ignition and main burners as described in section 6.3

1. Inlet Pressure Test Point.
2. Outlet Pressure Test Point.
3. Burner Pressure Adjuster.

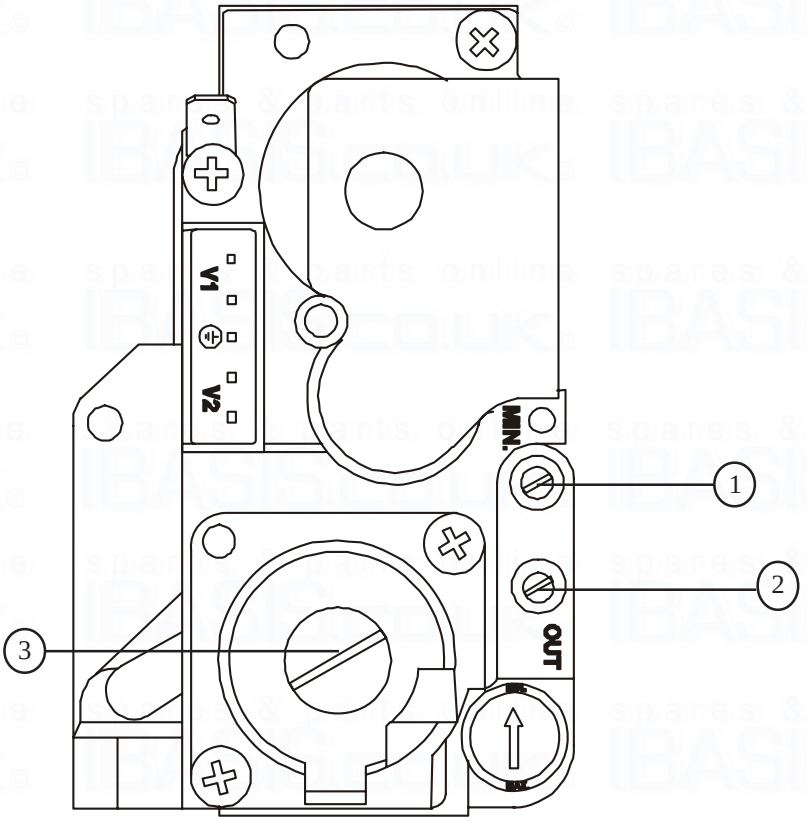

Fig. 8
Multifunction Control

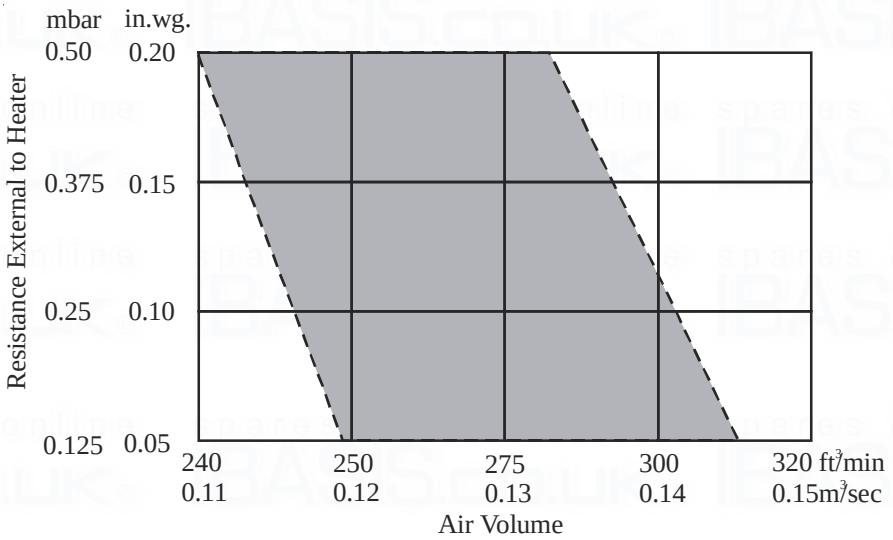

Fan Performance Curve

6.6.6 Allow the heater to run for a period of 5 minutes to stabalise.

6.6.7 Turn off gas supply to heater at the heater Gas Cock. DO NOT TURN OFF AT GAS METER!

6.6.8 Having detected the fault condition, the module should cause the red LED on the indicator panel to flash and the module will go through the ignition sequence. Having detected the fault condition a second time, the control module should cause the heater to go into lockout, indicated by a constant red LED and the LED status indicator will show "6"

6.6.9 Reinstate gas supply and wait for a minimum period of 10 seconds.

6.6.10 Depress the "RESET" button on the Indicator Panel.

6.6.11 The heater will go through its ignition procedure and the ignition and main burners SHOULD ignite.

6.6.12 Set the "AIR HEATER" switch on the time control unit to "TIMED"

7 INTEJAN CIRCULATOR

7.1 **WATER CIRCULATION SYSTEM.** Detailed recommendations for the water circulation system are given in BS6798, BS5449 (for small bore and microbore central heating systems), and BS5446. The maximum water side operating pressure (PMS) is 3 bar.

7.1.1 To ensure good circulation in gravity circuits, flow pipes should be designed to run vertically from the water heater before running laterally. Any lateral run should be less than 2 x the previous vertical run. Pipework should be installed with a rise towards the vent point. In systems with poor circulation, a pump kit is also available.

7.1.2 Drain cocks must be located in accessible positions that permit the draining of the whole system, including the appliance and hot water storage vessel. A drain cock should be fitted at the lowest point of the water heating circuit and, in the case of an indirect system, another must be fitted at the lowest point of the cold feed. Drain cocks should be at least $^1/_2$ in nominal size and be in accordance with BS2879.

7.1.3 Economy valves can only be used in a DIRECT installation.

NOTE: **The circulator thermostat is factory set to provide a temperature range of 50°C to 82°C. The temperature is increased by rotating the theromostat knob clockwise and temperature stop 2 MUST be left in position (see fig. 9a) if the circulator is used on a direct system, ensuring a maximum temperature of 60°C. For indirect applications, remove temperature stop 2.**

In order to ensure that soundness of the heater is maintained, you MUST ensure that flow and return pipes into the sealed compartment are sealed with the supplied grommets!

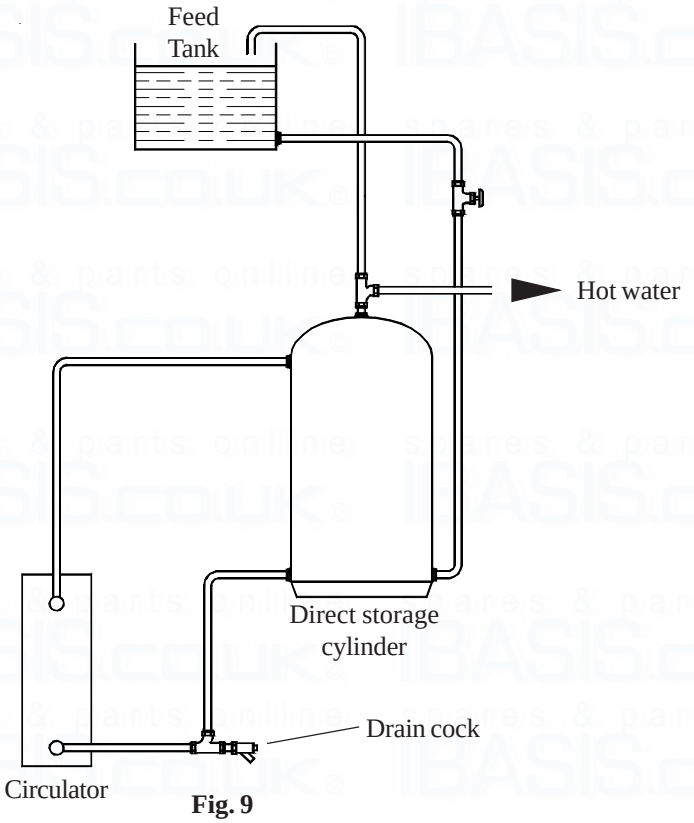

Fig. 9
Typical INTEJAN direct system application.

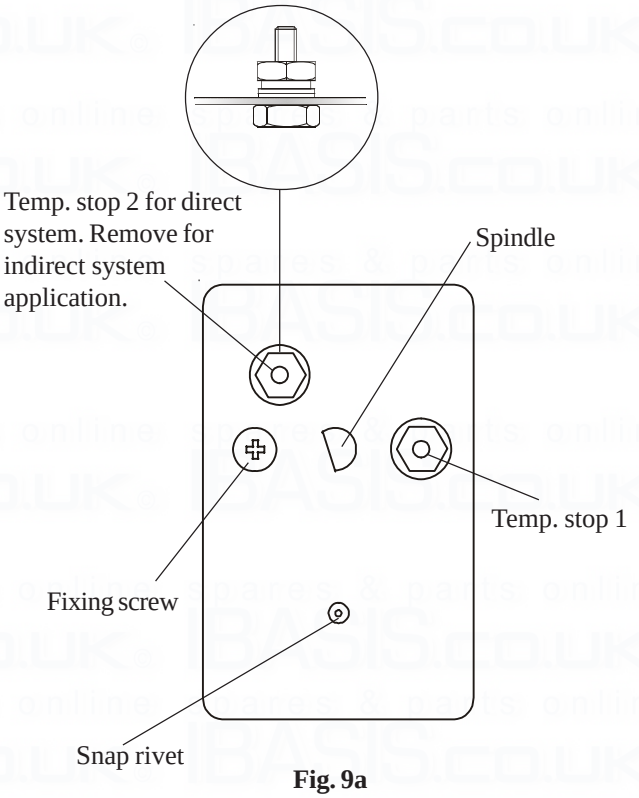

Fig. 9a
Position of temperature stops

7.2 WATER CONNECTIONS:

Note: Both flow and return connections are Rp$^3/_4$ ($^3/_4$ in BSP female) connections.

IMPORTANT: Use compression fittings at the appliance flow and return connections and at the air heater casing exit, to facilitate easy access to the circulator body.

7.2.1 Remove the fixing screws holding the sealing panel in place.

7.2.2 Carefully remove the sealing panel, such that access can be gained to the circulator compartment.

7.2.3 **Side Exit:** Knockouts/holes are provided in both sides of the heater cabinet for external pipe routing. Horizontal pipe runs are to be kept to an absolute minimum.

7.2.4 **Top Exit:**

A) Remove the plastic plugs from the air heater top panel and the fan chamber floor.

B) Pass the flow and return pipes (flow pipe to the rear) from below and then locate the pipes with the circulator body connections. Fully tighten the connections to the main body before completing the connections to the top ends of the Flow and Return pipes, ensuring that the pipework does not restrict access to the circulator thermostat phial pocket or the air heater heat exchanger access panel.

NOTE: In order to maintain an air tight seal, the supplied grommets MUST be used where the flow and return pipes pass through the upper sealing plate and diaphragm.

IMPORTANT: Ensure that the fittings on the circulator body are well supported when making flow and return connections.

7.2.5 Using good quality duct tape, seal around the Flow and Return pipes where they pass through the air heater top panel and fan chamber floor.

8. INTEJAN CIRCULATOR COMMISSIONING

8.1 PREPARATION:

8.1.1 Ensure that the gas and electrical supplies are **OFF.**

8.1.2 Fill the water circulation system, clear any air locks and check for water soundness, sealing any leaks detected.

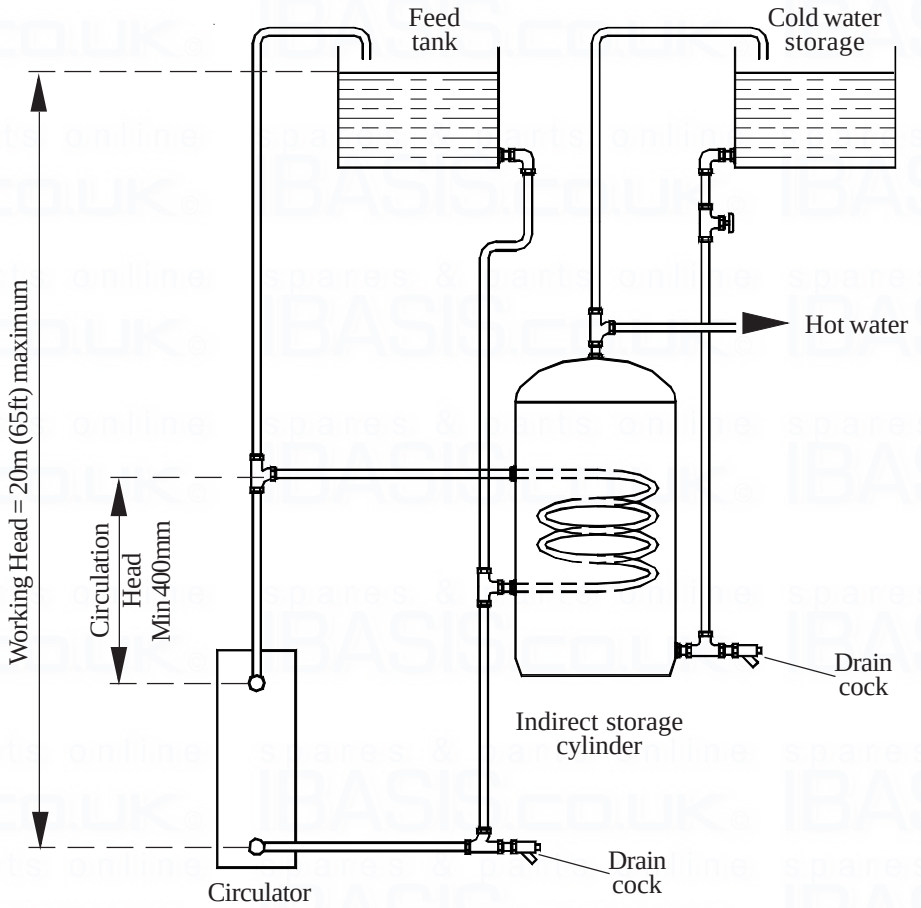

Fig. 10
Typical INTEJAN indirect system application.

8.1.3 Refit the sealing panel and secure using the fixing screws.

NOTE: Whilst the sealing panel needs to be fixed in such a manner so as to ensure an air tight seal, care MUST be taken not to over tighten the fixing screws.

8.2 LIGHTING IGNITION AND MAIN BURNERS:

8.2.1 Turn on the gas supply to the heater.

8.2.2 Set both the "AIR HEATER" and "WATER HEATER" switches on the time control unit to the "OFF" position.

8.2.3 Set the thermostat so that it reaches the maximum stop.

8.2.4 Unless you have already done so, loosen the top and bottom screws on the electrical cover plate. DO NOT COMPLETELY REMOVE THE SCREWS.

8.2.5 If not already removed, remove by sliding the plate upwards, such that the LED status indicator can be observed through the inspection hole at the bottom right hand corner of the control module.

8.2.6 Turn on the mains power supply to the heater

8.2.7 Set the "WATER HEATER" switch on the time control to "CONT." and observe the LED status indicator.

8.2.8 Whilst the control module runs through its diagnostic cycle the decimal point (DP) in the bottom right hand corner of the LED display will flash continuously.

8.2.9 The ignitor will spark for a maximum period of 60 seconds during which time the ignition burner and main burner SHOULD ignite and the igniter will stop.

8.2.10 When the control module reaches stage 8, (indicated by "8" on the LED) power is fed to the gas valve and the green LED "ON" light on the indicator panel will illuminate. After a period of approx. 5 seconds, the module will move on to stage 9 (indicated by "9" on the LED). **NOTE: regardless of when the burner ignites during the 60 second period, the LED will continue to display stage 9.**

8.2.11 If, after the 60 second period, the main burner has ignited the LED indicator will show "0" and the green LED "ON" light on the indicator panel will remain steady.

8.2.12 If the main burner fails to ignite, the red LED marked "LOCKOUT" will illuminate on the display panel and the LED status indicator will display an alphanumeric character relevant the the fault detected.

8.2.13 In the event of a lockout and the ignition and main burners failing to ignite, reference should be made to table 4 in the fault finding section of these instructions in order to establish the fault condition.

8.2.14 Test for gas leakage at the supply, multifunctional control, ignition burner and main burner using proprietary detection fluid, sealing any leaks found.

8.2.15 Allow the circulator to operate for a minimum of 15 minutes to ensure stability.

8.2.16 Reset the thermostat to the desired water temperature.

8.2.17 Set the time control to the desired "on" and "off" periods.

8.2.18 Set the "WATER HEATER" switch on the time control to "TIMED".

8.3 WATER BURNER PRESSURE TEST:

NOTE: THE WATER CIRCULATOR BURNERS ARE PRE-SET AND SHOULD NOT REQUIRE ADJUSTING.

8.3.1 Loosen the screw on the outlet pressure test point and fit a pressure test gauge (see Fig. 8)

8.3.2 Check the gauge reading against the information at paragraph 1.3.

8.3.3 If necessary, use the burner pressure adjuster to obtain the required gauge reading as shown at paragraph 1.3

8.3.4 Remove the pressure gauge and re-tighten the screw on the outlet pressure test point.

8.4 SAFETY CHECKS:

8.4.1 Check for gas soundness within the appliance.

8.4.2 Check for water soudness around circulator and ALL joints.

8.4.3 Turn on both the gas and electrical supplies to the heater.

8.4.4 Set the "WATER HEATER" switch on the time control unit to "CONT".

8.4.5 Light the ignition and main burners as described in section 8.2

8.4.6 Allow the circulator to operate for a period of 5 minutes to stabilise.

8.4.7 Turn off gas supply to heater at the heater gas cock. DO NOT TURN OFF AT GAS METER!

8.4.8 The circulator SHOULD automatically go into "LOCKOUT" indicated by the red LED on the indicator panel and the LED status indicator will show "H"

8.4.9 Reinstate gas supply and wait for a minimum period of 10 seconds.

8.4.10 Depress the “RESET” button on the indicator panel.

8.4.11 The heater will go through its ignition procedure and the ignition and main burners SHOULD ignite.

8.4.12 Set the “WATER HEATER” switch on the time control unit to “TIMED”

9. INSTRUCTIONS FOR USERS

9.1 If the building is unoccupied, ensure that the user instructions are left taped to the air heater for the the user’s reference and that the installation instructions are left at or near the air heater for use on future service calls.

9.2 If the building is occupied, hand the user instructions over and ensure that the user understands:

9.2.1 How to light both the air heater and water circulator.

9.2.2 How to re-set the air heater or water circulator if “LOCKOUT” occurs.

9.2.3 How to operate the time control, thermista-stat and the SUMMER AIRFLOW switch.

9.2.4 That the time control must be reset following a power failure.

9.2.5 How to use the circulator thermostat to set the water temperature.

9.2.6 How to turn off the heater and switch off the electrical supply to the heater.

9.2.7 How to remove, clean and refit the air filter and at what intervals, (i.e. fortnightly, or weekly for new houses).

9.2.8 How to control the heating system by opening and closing warm air outlets.

9.2.9 How to obtain summer air circulation.

9.2.10 That the air grilles on the heater or heater compartment; grilles and ventilators in the walls, windows or doors of the building **MUST NOT BE OBSTRUCTED**.

9.2.11 That the heater must be serviced at least once a year by a competent person to ensure efficient and safe operation.

9.2.12 That the red instructions for safe use have been pointed out and understood.

9.2.13 That expert help must be obtained if persistent “LOCKOUT” occurs.

10. MAINTENANCE

NOTE: It is recommended that this appliance be serviced at intervals of no less than 12 months.

IMPORTANT: Ensure that the gas and electricity supplies are isolated before commencing any maintenance or replacement of components. Because the appliance is room sealed, it is also imperative that if at any stage of repairs the gasket on the sealing plate is damaged it MUST be replaced! After completion of any maintenance, always test for gas soundness and carry out a complete functional test of the appliance in accordance with the Commissioning Instructions at paragraphs 6.1 to 6.9 inclusive.

10.1 **ROUTINE MAINTENANCE:**

10.1.1 Operate the appliance and check for the correct function of the burner and controls.

10.1.2 Turn OFF the gas and electrical supplies to the appliance.

10.1.3 Remove the air heater front panel.

10.1.4 Remove and check the return air filter/cleaner for cleanliness, remove and clean the air circulation fan as detailed in para 10.6.

10.1.5 Remove the burner and controls assembly as detailed in para 10.2, inspect and clean the main burner and injector as necessary. Examine the main burner for cracks, including hairline cracks, exchanging the burner as necessary.

10.1.6 Inspect and clear the ignition burner orifice.

10.1.7 Clean the heat exchanger flueways by thoroughly brushing from above and below.

10.1.8 By viewing through the fan aperture, and using a torch or similar, examine the heat exchanger externally for signs of cracks or holes, particularly around welded joints.

10.1.9 Using a torch or similar, introduce a light source into the heat exchanger burner aperture and upper access port, and again examine the heat exchanger for signs of cracks or holes, particularly around welded joints, whilst again viewing through the fan aperture.

10.1.10 Refit the air circulation fan, burner and controls assembly, and air filter/air cleaner.

10.1.11 Allow the air heater to operate for approximately 15 minutes to ensure stability and, with the main burner lit, ensure that the operation of the air circulation fan does not affect the main burner flame profile.

10.1.12 Locate the flue gas test point (see fig.1) and attach a flue gas analyser to the test point in accordance with the manufacturer's instructions. **NOTE:** the CO/CO_2 ratio should be no greater than 0.008

10.1.13 Fully commission the appliance in accordance with paragraphs 6 and 8.

NOTE: The flue gas test MUST NOT be used as an alternative to servicing the heater!

10.2 MULTIFUNCTION CONTROL AND AIR HEATER/WATER CIRCULATOR BURNER ASSEMBLY REMOVAL:

NOTE: Both the air heater and water circulator burner assemblies, as well as their respective ignition burner assemblies, MUST be removed as a complete unit together with their respective multifunction control.

PROCEDURE:

10.2.1 Ensure that the gas and electrical supplies are switched OFF.

10.2.2 Remove the front door from the heater.

10.2.3 Remove the fixing screws that hold the sealing panel in place and carefully remove the panel.

10.2.4 Disconnect the electronic module from the relevant multifunction control by removing the securing bolt and sliding it forwards off the multifunction control, taking care not to cause damage!

10.2.5 Disconnect the gas supply to the water circulator multifunction control at the flared connection on the top of the gas supply feed.

10.2.6 For removal of the air heater mutifunction control, remove the relevant burner assembly fixing screws.

10.2.7 Break the gas supply at the gas union and remove the gas feed pipe fixing screw.

10.2.8 Whilst supporting the assembly, carefully remove the fixing screws securing the multifunction control.

10.2.9 Carefully remove the complete assembly by sliding the sealing grommet out of the bulkhead, taking care not to cause damage to the grommet!

10.2.10 Refitting the burner assembly is a reverse procedure of the above instructions.

10.3 BURNER ASSEMBLY CLEANING:

10.3.1 Remove the burner assembly as detailed above.

10.3.2 Disconnect the ignition burner gas feed pipe from the ignition burner

10.3.3 Release the single screw, nut and washer securing the ignition burner to the main burner and remove the ignition burner.

10.3.4 Release the 2 screws, nuts and washers securing the main burner to the mounting bracket and remove the main burner.

10.3.5 Clean the burner thoroughly both inside and out with a soft brush. **DO NOT ENLARGE, DISTORT OR DAMAGE BURNER HOLES**.

10.3.6 Reassemble in reverse order.

10.4. IGNITION BURNER AND ELECTRODE REMOVAL AND REPLACEMENT:

10.4.1 Remove the burner as detailed in 10.2 above.

10.4.2 Disconnect the igniter lead from electrode.

10.4.3 Break the gas feed at the burner end of the gas feed pipe.

10.4.4 Release the single screw, nut and washer securing the ignition burner to the main burner assembly and carefully remove the ignition burner assembly.

10.4.5 Release the electrode securing nut from the ignition burner assembly and withdraw the electrode.

10.4.6 Release the ignition burner feed pipe securing nut from the ignition burner assembly and withdraw the feed pipe and injector from the ignition burner assembly. Disconnect the ignition burner injector from the ignition burner feed pipe hook.

10.4.7 Release the 2 x 5mm screws securing the ignition burner bracket to the ignition burner mounting bracket and remove the ignition burner bracket.

10.4.8 Refitting or replacement is in reverse order.

NOTE: If, at any time, the gas supply feed pipe is removed from the multifunction control, the 'O' ring MUST be replaced.

10.6 **AIR CIRCULATING FAN, REMOVAL AND CLEANING:**

10.6.1 Ensure that the electrical supply is isolated.

10.6..2 Remove the front door from the heater and remove the 3 x fixing screws on the electrical door assembly.

10.6.3 Open the door assembly outwards on its hinges (see fig. 7) such that access is gained to the rear of the assembly.

10.6.4 Disconnect the fan flying leads from the fan assembly.

10.6.5 Release the fan assembly securing screw and withdraw the fan assembly from the heater cabinet, avoiding damage to the fan blades.

10.6.6 Remove all dust from both the impeller and motor, taking care to not disturb the balance of the fan.

10.6.7 Refitting or replacement is in reverse order.

10.7 **CONTROL MODULE REMOVAL:**

10.7.1 Ensure that the electrical supply is isolated.

10.7.2 Remove the front door from the heater.

10.7.3 Loosen the top and bottom screws holding the electrical cover plate in place on the electrical door assembly. (see fig. 7) DO NOT COMPLETELY REMOVE THE SCREWS AT THIS STAGE.

10.7.4 Remove the cover plate by sliding it upwards, such that it exposes the control module.

10.7.5 Carefully disconnect the module by lifting the connecting blocks off the circuit board (see fig. 11)

NOTE: There is no need to loosen any of the connection screws on the connector blocks!

10.7.6 Completely remove the top and bottom cover plate screws and pull the control module free of the electrical door assembly.

10.7.7 Fit the new control module in place and partially fit the cover plate fixing screws. DO NOT TIGHTEN SCREWS AT THIS STAGE!

10.7.8 Re-connect the module by carefully pushing the connector blocks onto the circuit board.

10.7.9 Re-fit the electrical cover plate and tighten the cover plate screws.

10.7.10 Re-establish electrical supply.

10.7.11 Commission air heater and water circulator as decribed in the relevant sections above.

NOTE:
To disconnect the module, LIFT the connector blocks off the circuit board. DO NOT remove the wires from the connector block!

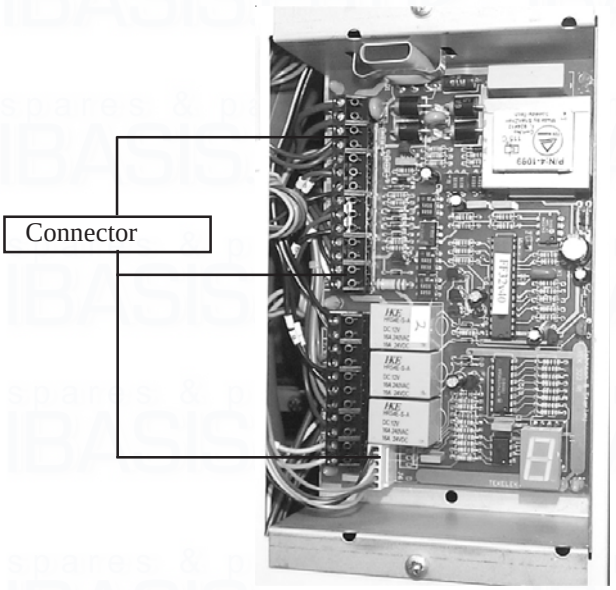

Fig. 11
Control module, showing connector blocks.

10.8 **TIME CONTROL, SWITCH AND LED INDICATOR (DAUGHTER BOARD) REMOVAL:**

Preparation:

10.8.1 Ensure that the electrical supply is isolated.

10.8.2 Remove the appliance front door and release the 3 x securing screws on the electrical door assembly.

10.8.3 Open the door assembly outwards on its hinges (see fig. 7) such that access is gained to the rear of the assembly.

Time Control removal:

10.8.3 Disconnect spade terminal connectors "**C1**", "**C2**", "**C3**" and "**C5**" from the time control.

10.8.4 Release the 3 x fixing screws securing the clock mounting plate to the electrical door and withdraw the total assembly from the door.

10.8.5 Remove the 3 X M3 bolts that secure the time clock mechanism and remove from the mounting plate.

10.8.6 Refitting or replacement is in reverse order.

LED Indicator (Daughter Board)

10.8.7 Disconnect the daughter board by unplugging the flylead from the control module board.

10.8.8 Release the 3 x fixing screws securing the clock mounting plate to the electrical door and withdraw the total assembly from the door.

10.8.9 Remove the 2 X M3 nuts holding the board onto the bolts and remove.

10.8.10 Replacement is in reverse order, ensuring to refit the spacers.

Switch/s removal:

10.8.11 Disconnect the spade terminal connectors **"S1"**, "**S2**" and **"S3"** or "**S4**", "**S5**" and "**S6**" from the switch terminals.

10.8.12 Release the switch/s by pressing out from the back of the electrical door assembly.

10.8.13 Fit new switch/s and lock into position by pressing home until the locking tabs locate on the top and bottom of the switch.

10.8.14 Re-connect the spade connectors.

10.8.15 Re-fitting of the electrical door assembly is in reverse order.

10.8.16 Close the electrical door assembly and secure using the 3 x fixing screws.

10.8.17 Set the time control to correct time.

10.8.18 Set the time control to the required "ON" and "OFF" periods.

10.9 **FAN DELAY CONTROL/LIMIT SWITCH REMOVAL:**

10.9.1 Ensure that the electrical supply is isolated.

10.9.2 Remove the appliance front door.

10.9.3 Remove the 2 x fixing screws holding the FDC/limit switch assembly in place and withdraw from the appliance.

10.9.4 Disconnect the wires from the terminal block and release the clamping bush, in order to remove the wiring harness.

10.9.5 Refitting or replacement is in reverse order.

10.10 **WATER CIRCULATOR THERMOSTAT REMOVAL:**

10.10.1 Remove the appliance front door.

10.10.2 Disconnect the spade terminals on the overheat limit switch and withdraw the harness through the grommet.

10.10.3 Disconnect the two spade terminals from the back of the thermostat.

10.10.4 Carefully loosen the control knob from the shaft of the thermostat using a large flat head screwdriver and remove.

10.10.5 Remove the retaining plug and withdraw the thermostat phial from the dry pocket on the water flow pipe, taking care not to cause damage to the capillary tube!

10.10.6 Loosen and remove the 2 x screws securing the thermostat and remove the thermostat from its mounting bracket.

10.10.7 Refitting or replacement is in reverse order.

10.11 **HEAT EXCHANGER ACCESS:**

10.11.1 Ensure that the gas and elctrical supplies are isolated.

10.11.2 Remove the appliance front door.

10.11.3 Remove the fixing screws holding the sealing panel in place and carefully remove the panel.

10.11.4 Remove the burner assembly as detailed at 10.2

10.11.5 Remove the multifunctional control for the water circulator (IF FITTED)

10.11.6 Release the 4 x screws securing the combustion chamber heat shield and withdraw the heat shield.

10.11.7 Reassembly is in reverse order.

NOTE: **When reassembling ensure that gaskets are soundly sealed and replaced where necessary (See cautionary note at paragraph 10) Prior to use, you MUST fully commission the heater in accordance with these instructions.**

10.11. **FLUE FAN, REMOVAL AND CLEANING**

10.11.1 Remove the air circulation fan as detailed at 10.6

10.11.2 Disconnect the power supply to the pressure swich.

10.11.3 Carefully remove the feed pipes to the pressure switch TAKING CARE TO NOTE THEIR POSITION.

10.11.4 Unscrew the 2 x fixing screws holding the pressure switch in place and remove the switch.

10.11.5 Carefully open the plastic insulators on the fan fly-lead and break the electrical connections such that the spade connectors can be fed through the grommet on the sealing plate..

10.11.6 Remove the fixing screws holding the flue fan sealing plate in place and remove the plate.

NOTE: WHEN REMOVING THE SEALING PLATE, CAREFULLY FEED THE PRESSURE PIPES THROUGH THE GROMMETS IN THE PLATE, TAKING CARE NOT TO PULL THE PIPES OFF THE FAN PRESSURE TAPPINGS!

10.11.6 Release the 4 x fixing screws holding the flue fan in place

10.11.7 Carefully withdraw the fan and its gasket from the collecter box, taking care not to damage the fan blades.

10.11.8 Remove all dust from both the impeller and motor, taking care not to disturb the balance of the fan.

10.11.9 Refitting/replacement is in reverse order.

11. DEFECT DIAGNOSIS

The following table shows the LED status indicator display and the corresponding fault condition, along with the lockout type. It should be noted that under certain conditions the red LED relating to the air heater may flash. This is part of the control sequence and the module should reset automatically. It is ONLY necessary to press the "RESET" button if the red LED is continually illuminated !

LED Display	Cycle	Fault Condition	Lockout Type
0	Running	None: all is well	None
1	Air Proving	Air switch closed	Absolute
2	Air Proving	Gas valve relay ON (either)	Absolute
3	Air Proving	Air switch closure failed	Absolute
4	Prove Heater Relay	Gas valve current, relay should be open	Air Heater
5	Prove Heater Valve	None (wait for Ignition Burner)	Air Heater
6	Prove Heater Valve	Flame failure	Air Heater
7	Prove Circulator Relay	Gas valve current, relay should be open	Circulator
8	Prove Circulator Valve	None (wait for Ignition Burner)	Circulator
9	Prove Circulator Valve	Flame failure	Circulator
A	Running	Excessive cabinet teperature	Absolute
C	Running	Air flow sensor out of range	Air Heater
E	Running	Problem with air circulator fan	Air Heater
F	Running	Air heater limit stat	Air Heater
H	Running	Circulator limit stat	Circulator
L	Running	Open air flow sensor	Air Heater

Table. 4
Control module fault indications

NOTE: When the air heater and water circulator are used in combination, the status indications for the water circulator will override those for the air heater; therefore LED displays "8" and "9" will override "5" and "6". For this reason, it is strongly recommended that the air heater and water circulator be commissioned independently of each other.

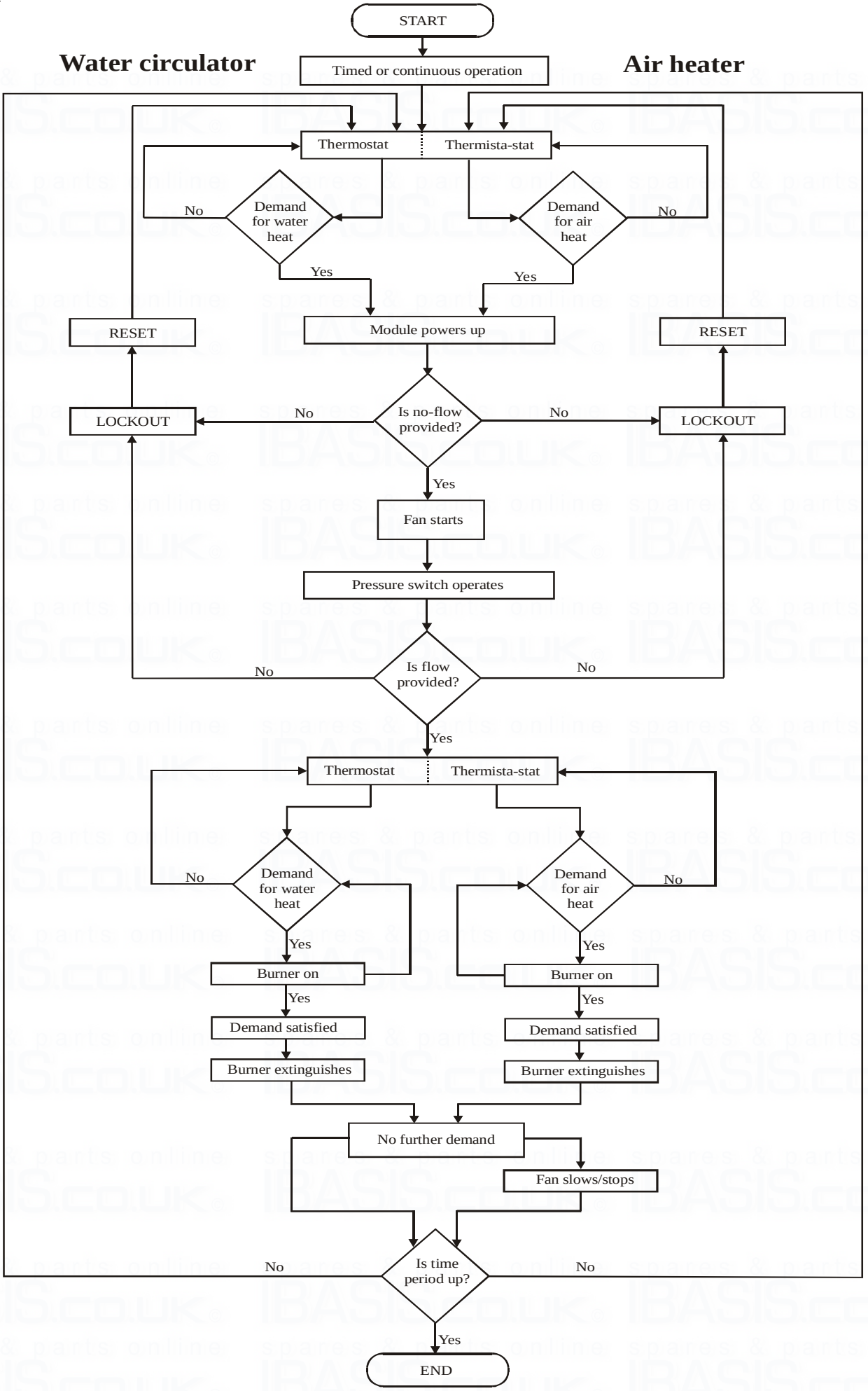

Fig. 12
Control Flowchart

Air Heater
Diagnostics Flowchart

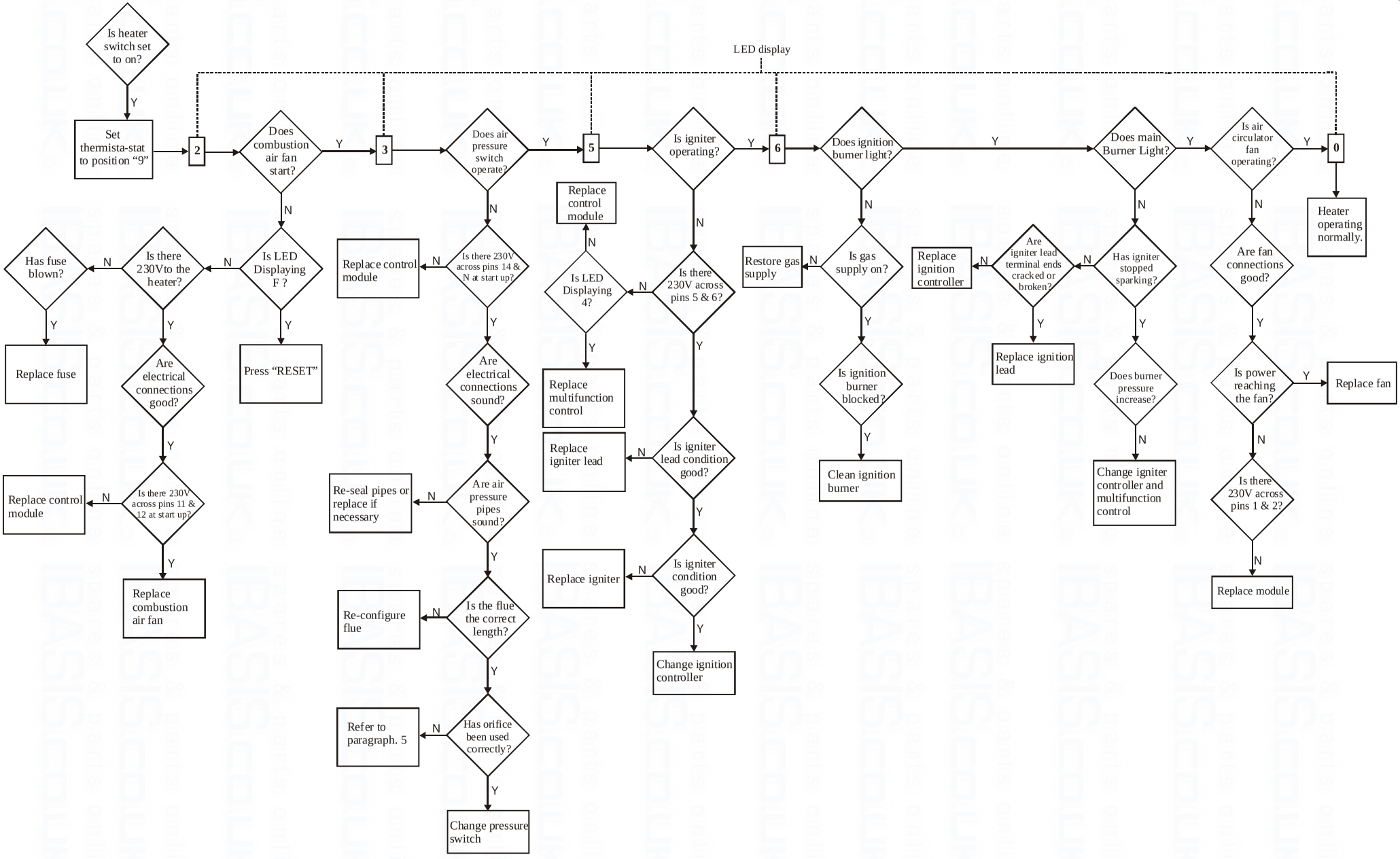

Water Circulator Diagnostics Flowchart

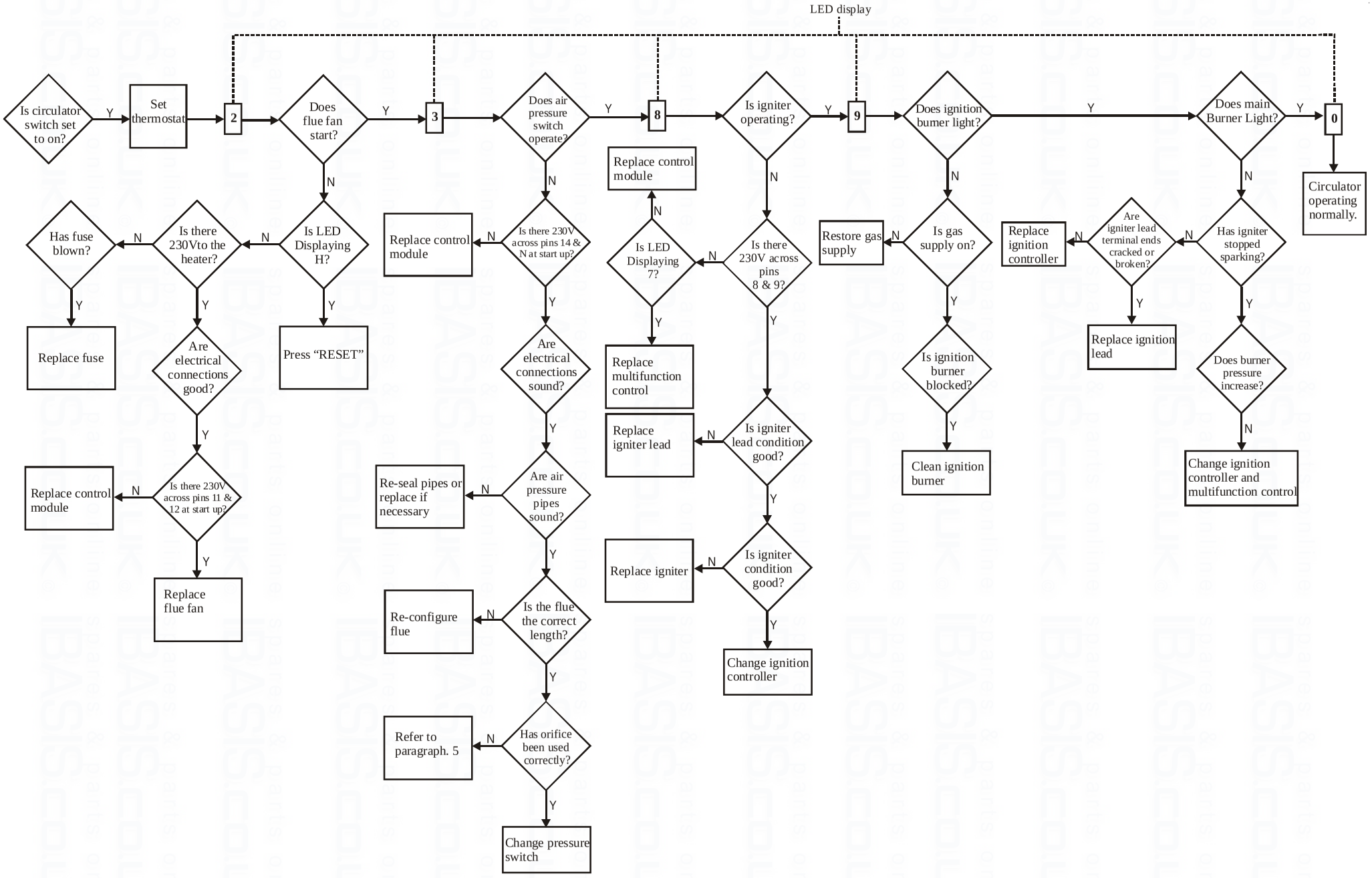

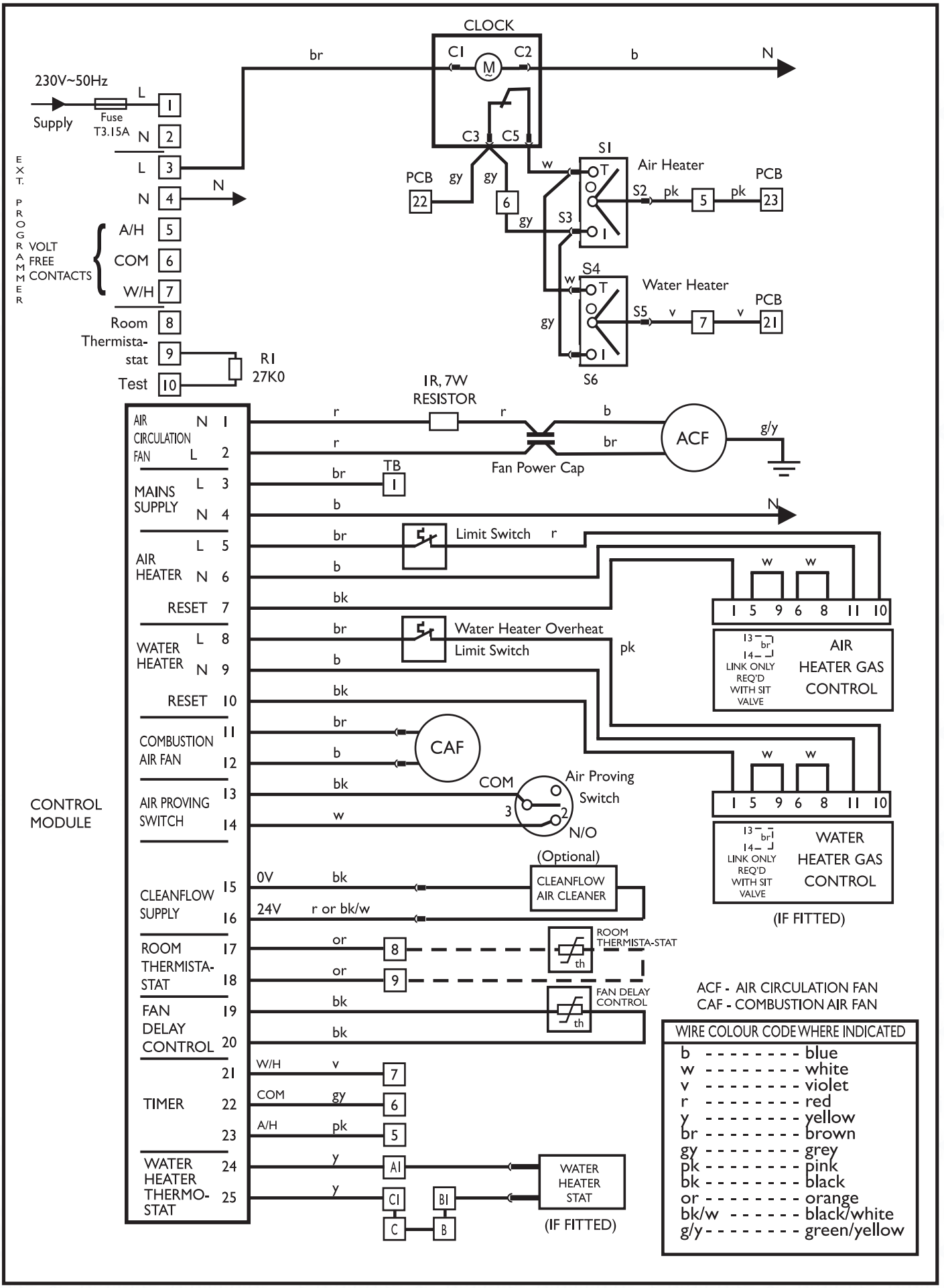

Fig.13
ECONOMAIRE 31 Flow Diagram

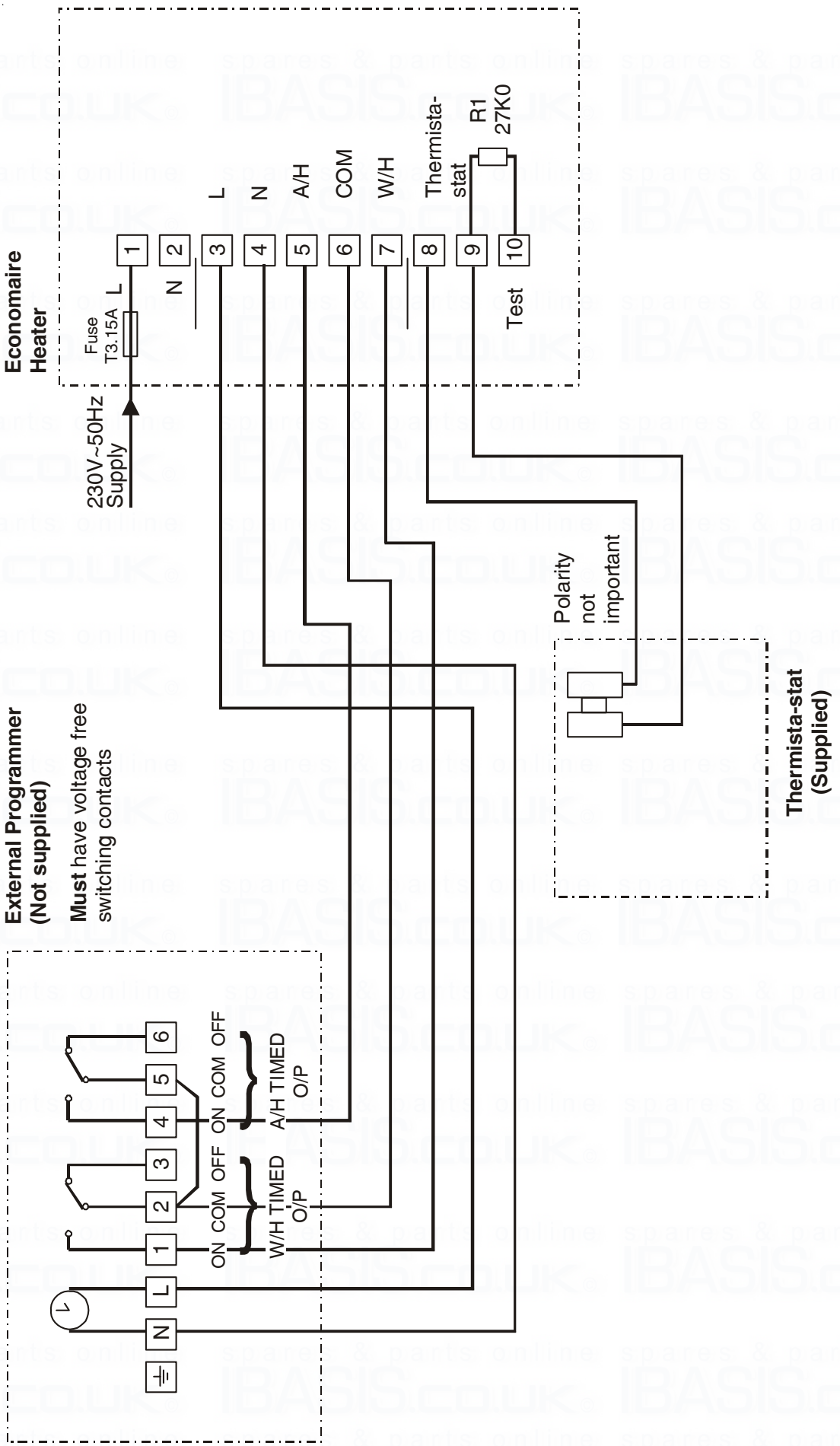

Fig. 15
Schematic Diagram (showing connection of an external controller)

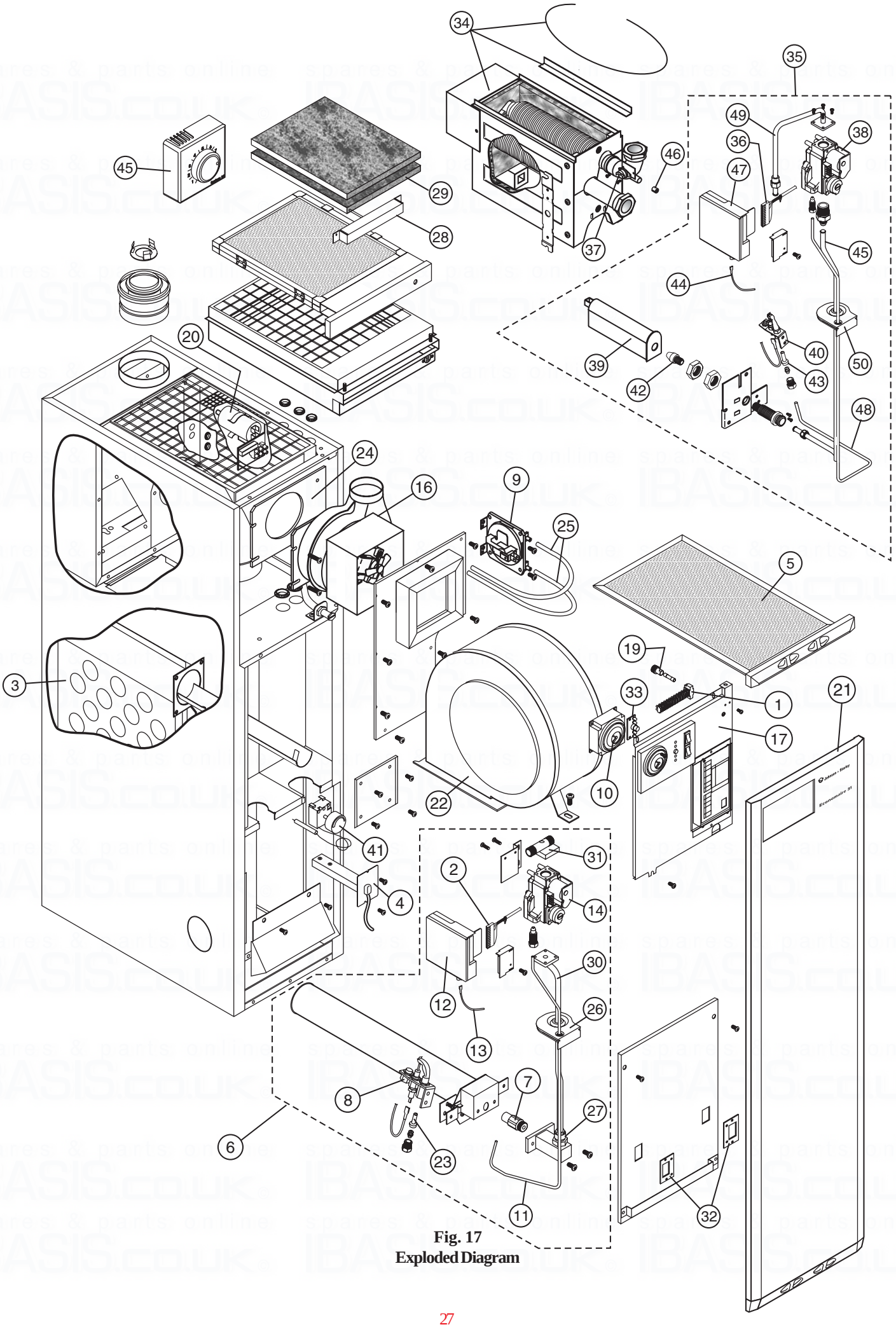

Fig. 17
Exploded Diagram

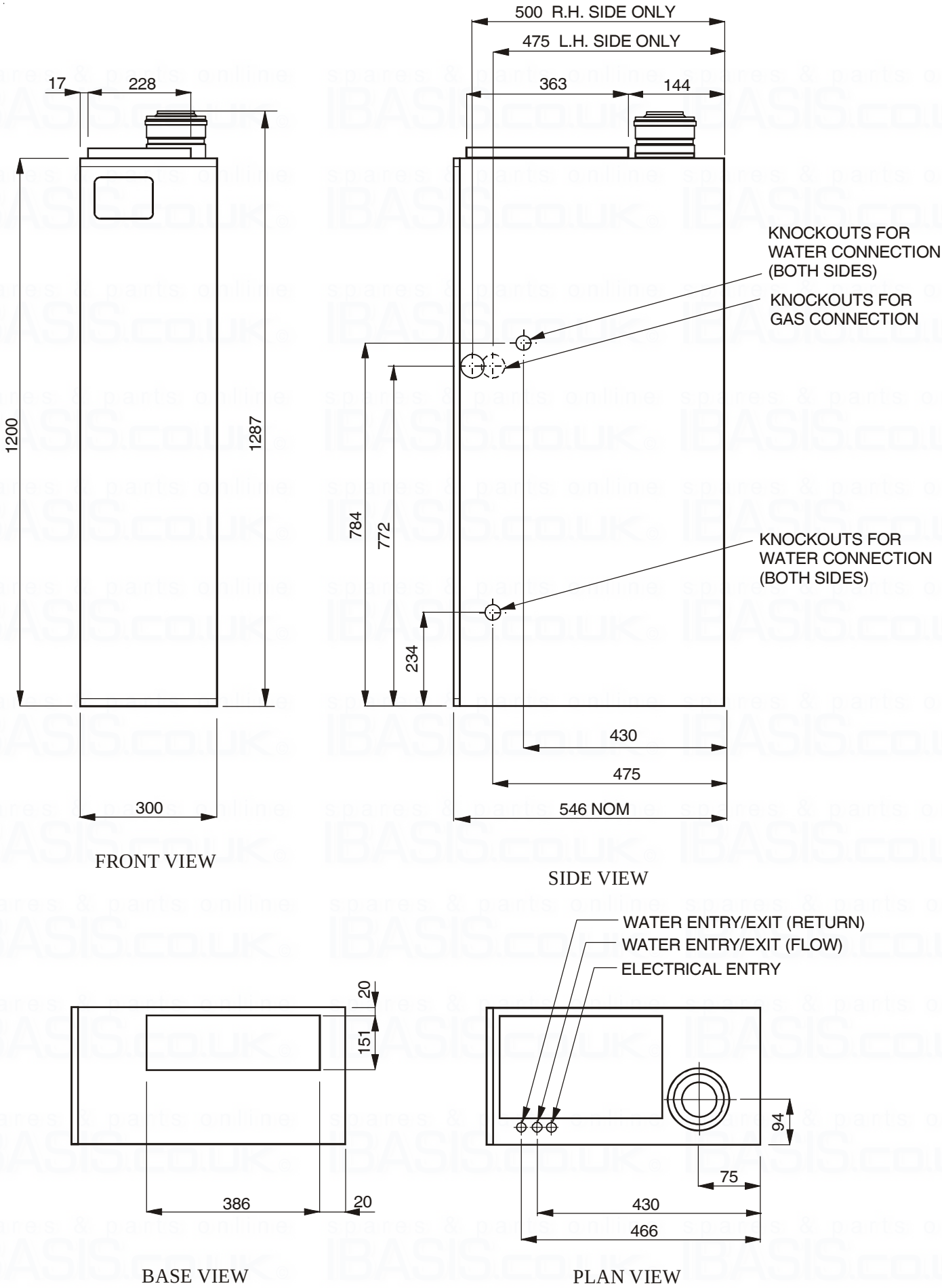

Fig. 16
ECONOMAIRE 31 - Principal Dimensions

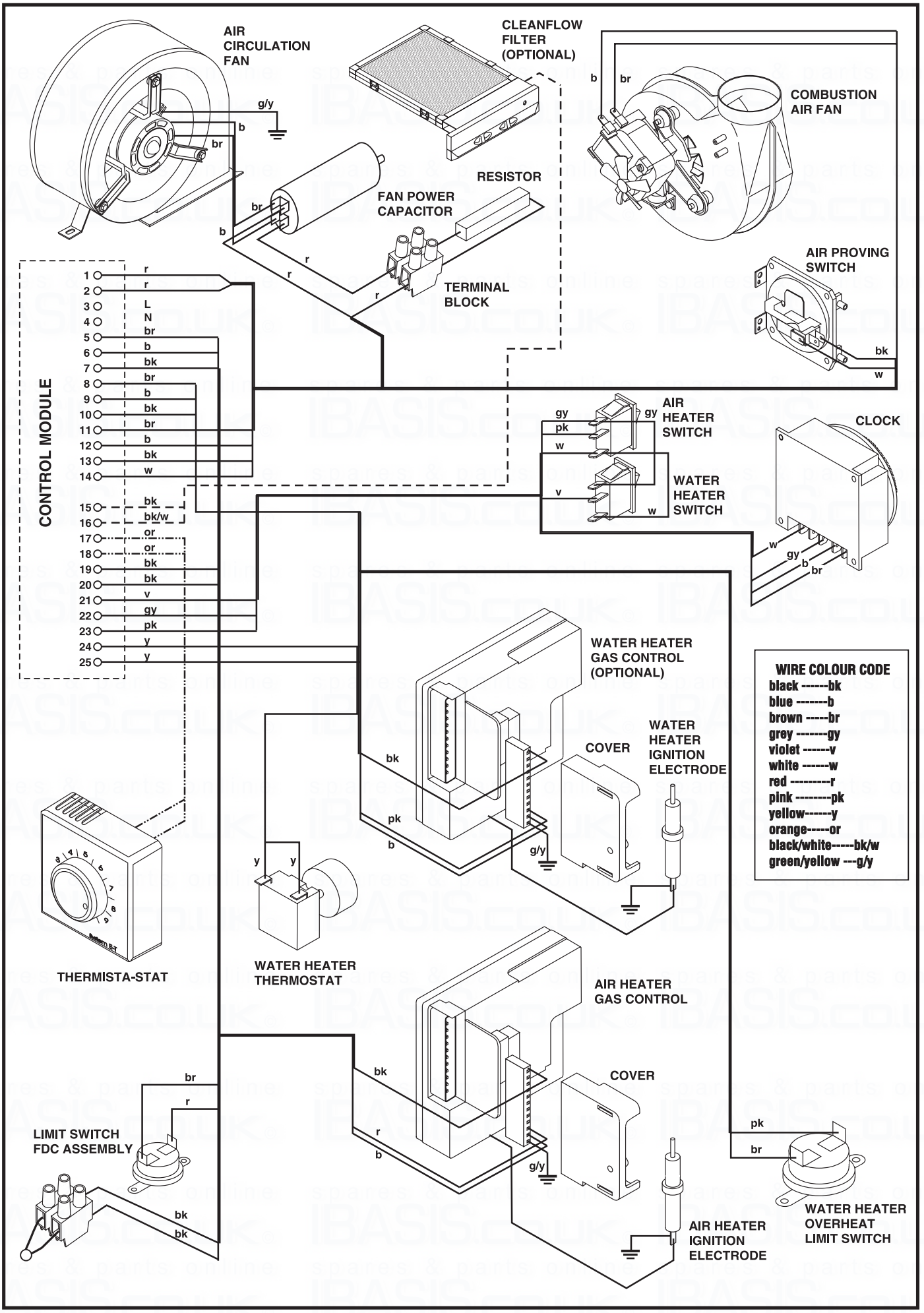

Fig.14
ECONOMAIRE 31 Logic Diagram

12.

LIST OF SPARES (See Fig.17)
ECONOMAIRE 31 and ECONOMAIRE 31/INTEJAN

Item	G.C. No	Part No	Description	Qty
1	E69625	1000-0521020	Wiring harness	1
2	E80119	1000-0521860	Wiring harness (air heater)	1
3		N310-0350005	Heat exchanger	1
		N312-0350005	Heat exchanger (from serial no. 59000501)	1
4	E80123	1000-0521820	FDC & limit switch	1
5		N310-0145000	Filter assembly	1
		N312-0145000	Filter assembly (from serial no. 59000501)	1
6		N310-0702000	Burner & control assembly	1
7		1000-0708260	Main burner injector (Polidoro ref: AL270)	1
8	173 096	BOS 02397/1	Ignition burner assembly	1
9	E69631	1000-0520860	Air pressure switch	1
10	E69632	1000-0520830	Clock mechanism	1
11		1000-0708600	Ignition burner feed pipe	1
12	E80141	1000-0708510	Electric flame control device (Honeywell)	1
13	E80159	1000-0708990	Igniter lead	1
14	E80143	1000-0708520	Multifunction control	1
15	245 514	1000-0515620	Thermista-stat	1
16		N310-0504005	Combustion air fan (SIFAN)	1
17		N310-0500000	Complete electrical panel	1
		N312-0500000	Complete electrical panel (from serial no. 59000501)	1
18	E80146	1000-0520850	Control module	1
19	245 509	1000-0513820	Fuse T3.15A (anti surge)	1
20	245 542	1000-0515970	Capacitor 15µf	1
21		N310-0167000	Cabinet door assembly	1
		N312-0167000	Cabinet door assembly (from serial no. 59000501)	1
22	E76429	1000-0500375	Air circulation fan	1
23	392935	1000-0701260	Ignition burner injector (No 27)	1
24	E69653	1000-1507310	Gasket	1
25		SO1159	Air Pressure Tube Kit	1
26	E80151	1000-2501050	Grommet	1
27		1000-0708570	12mm Bulkhead Fitting	1
28	E69656	1000-0505540	Electronics box (cleanflow)	1
29	E69658	AO186 x 0309	Cleanflow filter medium (pad)	2
30		1000-0708590	Gas feed pipe	1
31		1000-0708620	Gas feed pipe	1
32			View port window (NOT AVAILABLE AS A SPARE)	
33	E69648	1000-0520880	Reset panel (Daughter board)	1
Water Circulator:				
34	244-876	SOO284	Main body assembly (inc. baffle & spring clip)	1
35		N310-0700000	Complete burner assembly	1
		N312-0700000	Complete burner assembly (from serial no. 59000501)	1
36	E80155	1000-0521870	Wiring harness	1
37	E69670	1000-0520920	Overheat cut-off switch	1
38	E80143	1000-0708520	Multifunction control	1
39	384 615	BOS 00562	Burner arm	1
40	244880	BOS 02397/1	Ignition burner assembly	1
41	398003	1000-0702040	Thermostat	1
		1000-0708930	Thermostat assembly (from serial No: 59000501)	
42	E80158	1000-0702090	Main injector nozzle (Amal 187/001/400)	1
43	392935	1000-0701260	Ignition burner injector (No 27)	1
44	397819	1000-0708990	Igniter lead	1
45		1000-0708630	Main burner gas feed pipe	1
46	230 328	1000-2500070	Phial retaining plug	1
47	E80141	1000-0708510	Electronic flame control device (Honeywell)	1
48		1000-0708640	Ignition burner feed pipe	1
49		1000-0708610	Gas feed pipe	1
50	E80151	1000-2501050	Grommet	1

Johnson and Starley prides itself on its ability to supply spare parts quickly and efficiently. If you have a problem in obtaining a spare part, please contact our Spares Department at the address below.

JOHNSON & STARLEY LTD.
Rhosili Road,
Brackmills,
Northampton NN4 7LZ

Telephone: (01604) 762881

Fax: (01604) 767408